Product Name: VK-2124
Process: Dye Sublimation
Material: Polyknit 9
Scale: 50%
Effective Date: 07/15/2015 NDW

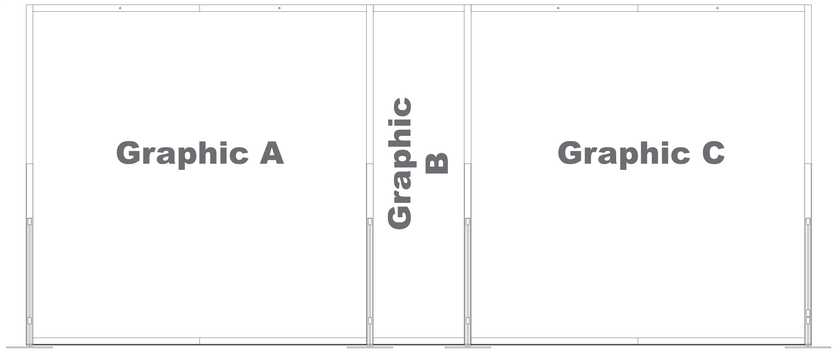

LIVE AREA INSIDE DOTTED LINES

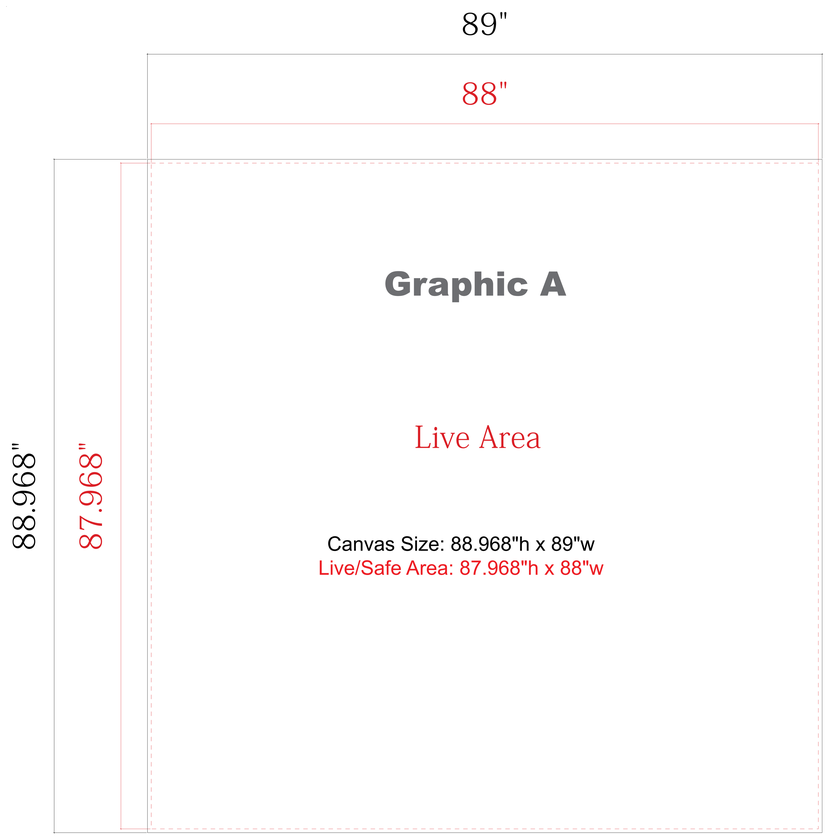

Main Backwall Graphic
Left Side
Qty. 1
Sew 1/2" Hook Velcro to Face/ Perimeter

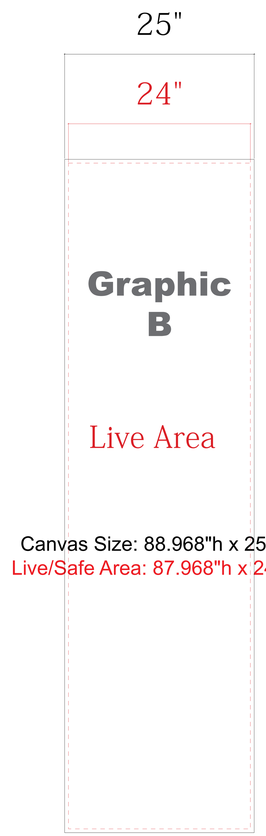

Main Backwall Graphic
Center
Qty. 1
Sew 1/2" Hook Velcro to Face/ Perimeter

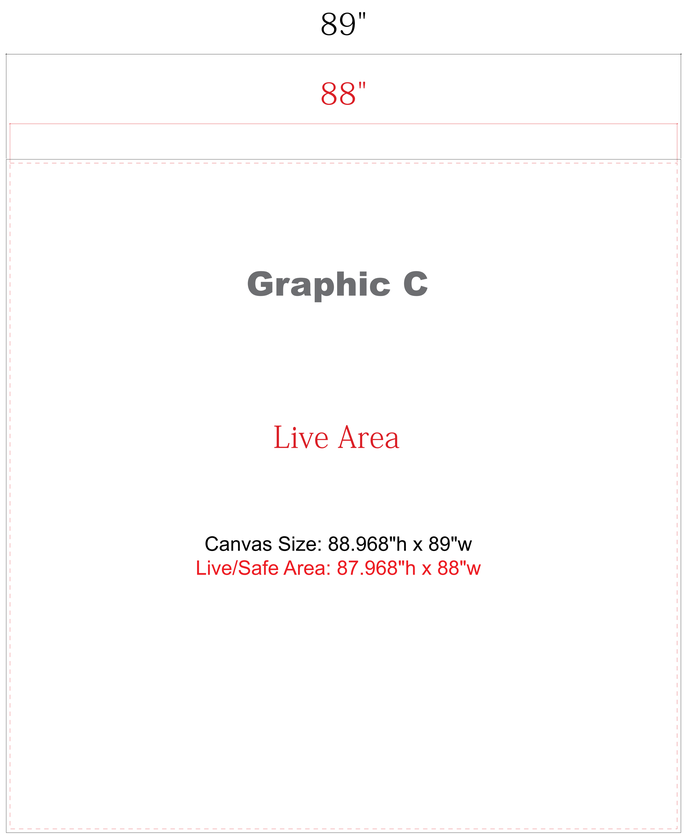

Main Backwall Graphic
Right Side
Qty. 1
Sew 1/2" Hook Velcro to Face/ Perimeter

****NOTE**: Test frames may be required for guaranteed fitting of graphics**

NOTE: Graphic files must be @ 150 dpi Finished Size. ***DO NOT*** send Flattened Files. Production can not manipulate the content, proportion or color of these files.

Product Name: VK-2124
Process: Direct Print
Material: Sintra / Acrylic
Scale: 50%
Effective Date: 07/15/2015 NDW

Convex Graphic Wings
1/8" Sintra / Acrylic
Left Side
Qty. 1 Upper, 1 Lower

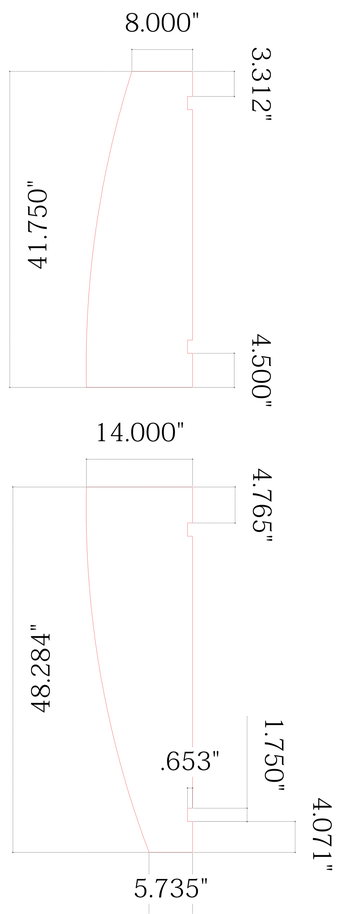

Convex Graphic Wings
1/8" Sintra / Acrylic
Right Side
(Mirror Left Side)
Qty. 1 Upper, 1 Lower

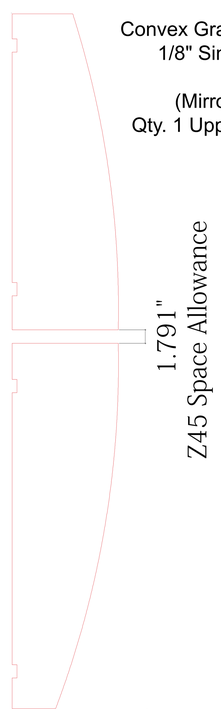

Direct Print Header Graphic
1/4" Sintra / Acrylic
Qty. 2

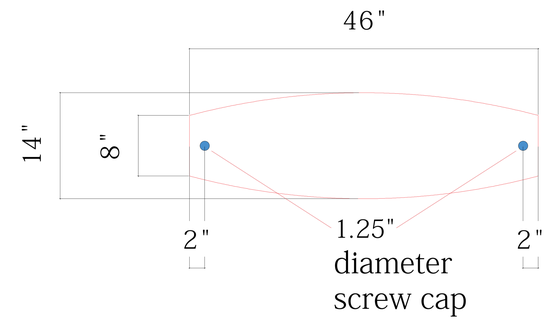

MOD-1293
Direct Print Front Infill Graphic
1/8" Sintra
Qty. 2

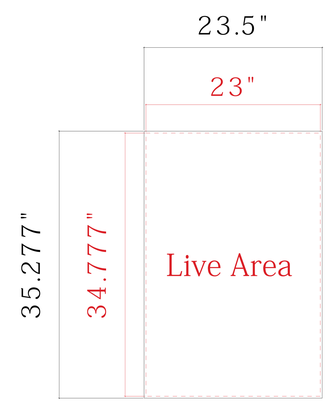

Canvas Size: 23.5"w x 53.277"h
Live/Safe Area: 23"w x 34.777"h

Backwall Workstation Facade
Direct Print Graphic
1/4" Sintra / Acrylic
Qty. 4

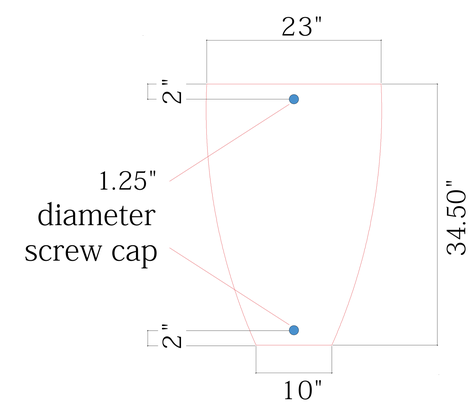

LIVE AREA INSIDE DOTTED LINES

****NOTE**: Test frames may be required for guaranteed fitting of graphics**

NOTE: Graphic files must be @ 150 dpi Finished Size.
DO NOT send Flattened Files. Production can not manipulate the content, proportion or color of these files.